BOTH - WELL

HIGH PRESSURE FITTINGS

FORGED
CARBON ALLOY
STAINLESS STEEL
THREADED SOCKETWELD

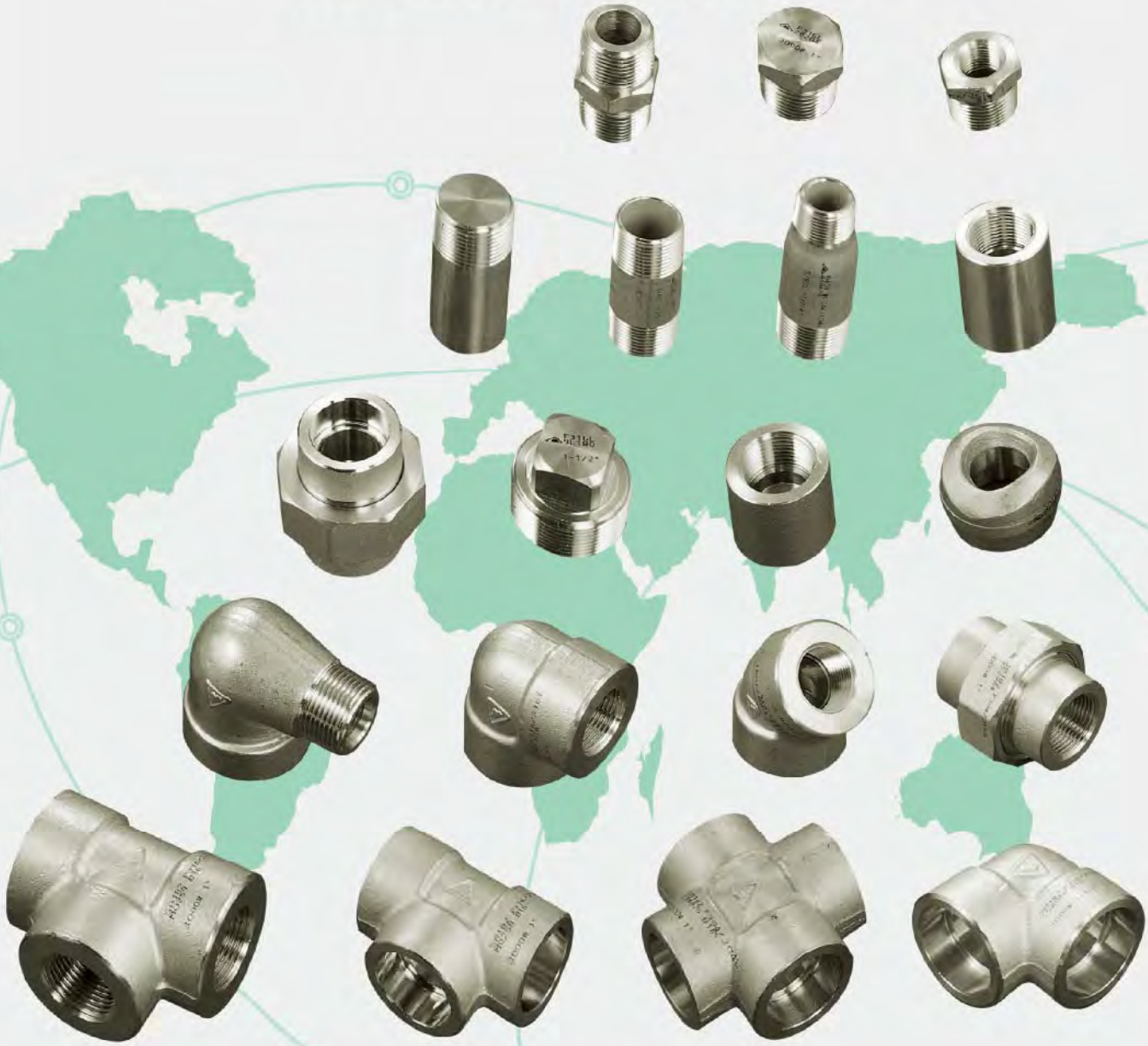

BOTH-WELL STEEL FITTINGS CO., LTD.
NO.303 Rensin Road,Renwu District,Kaohsiung City,
Taiwan,R.O.C. (81460)
TEL : 886-7-371-1536 371-0497 372-0260
FAX : 886-7-371-3864 371-3882

HEADQUARTER

MACHINING SHOPS

FORGING SHOP

PRODUCT LIST

FORGED HIGH PRESSURE PIPE FITTINGS
SOCKET WELD 3000-6000-9000 Lbs

ELBOW 90°

ELBOW 45°

TEE

CROSS

UNION

COUPLING

HALF COUPLING

CAP

BOSS

OUTLET

45° BRANCH OUTLET

INSERT

SWAGE NIPPLE

FULL COUPLING

ASME B16.11-2016 (Revision of ASME B16.11-2011)

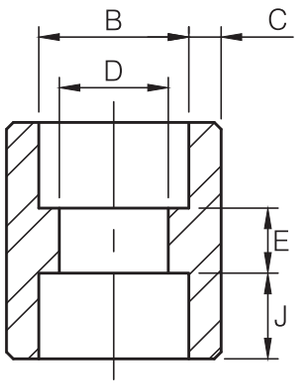

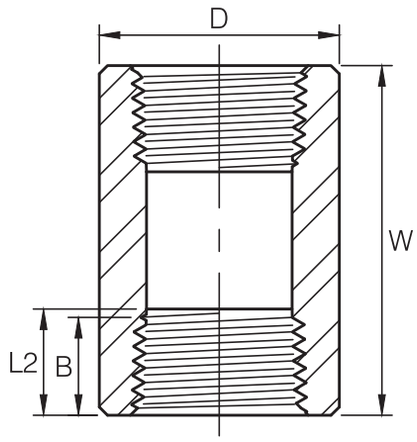

Dimensions are in millimeters.

Socket Welding							
DN	Nom. Pipe Size	B(2)	C(1)		D(2)	E(2)	J
			(Avg)	(Min)			(Min)
3000Lb							
6	1/8	10.8	3.18	3.18	6.9	6.5	9.5
8	1/4	14.2	3.78	3.30	9.3	6.5	9.5
10	3/8	17.6	4.01	3.50	12.6	6.5	9.5
15	1/2	21.8	4.67	4.09	15.8	9.5	9.5
20	3/4	27.2	4.90	4.27	21.0	9.5	12.5
25	1	33.9	5.69	4.98	26.7	12.5	12.5
32	1-1/4	42.7	6.07	5.28	35.1	12.5	12.5
40	1-1/2	48.8	6.35	5.54	40.9	12.5	12.5
50	2	61.2	6.93	6.04	52.5	19.0	16.0
65	2-1/2	73.9	8.76	7.67	62.7	19.0	16.0
80	3	89.8	9.52	8.30	78.0	19.0	16.0
100	4	115.2	10.69	9.35	102.3	19.0	19.0
6000Lb							
6	1/8	10.8	3.96	3.43	4.0	6.5	9.5
8	1/4	14.2	4.60	4.01	6.4	6.5	9.5
10	3/8	17.6	5.03	4.37	9.2	6.5	9.5
15	1/2	21.8	5.97	5.18	11.8	9.5	9.5
20	3/4	27.2	6.96	6.04	15.6	9.5	12.5
25	1	33.9	7.92	6.93	20.7	12.5	12.5
32	1-1/4	42.7	7.92	6.93	29.5	12.5	12.5
40	1-1/2	48.8	8.92	7.80	34.0	12.5	12.5
50	2	61.2	10.92	9.50	42.9	19.0	16.0
9000Lb							
15	1/2	21.8	9.35	8.18	6.4	9.5	9.5
20	3/4	27.2	9.78	8.56	11.1	9.5	12.5
25	1	33.9	11.38	9.96	15.2	12.5	12.5
32	1-1/4	42.7	12.14	10.62	22.8	12.5	12.5
40	1-1/2	48.8	12.70	11.12	28.0	12.5	12.5
50	2	61.2	13.84	12.12	38.2	19.0	16.0

(1) Average of socket Wall Thickness around periphery shall be no less than listed values. The minimum values are permitted in localized areas.

(2) Tolerance see page 21.

(3) Reducer : "C, J, E" in accordance with large size.
"D" in accordance with small size.
The others in accordance with each size.

Dimensions are in millimeters.

Threaded					
DN	Nom. Pipe Size	Length of Thread. (Min)		W	D
		B(*)	L2(*)		
3000Lb					
6	1/8	6.4	6.7	32	16
8	1/4	8.1	10.2	35	19
10	3/8	9.1	10.4	38	22
15	1/2	10.9	13.6	48	28
20	3/4	12.7	13.9	51	35
25	1	14.7	17.3	60	44
32	1-1/4	17.0	18.0	67	57
40	1-1/2	17.8	18.4	79	64
50	2	19.0	19.2	86	76
65	2-1/2	23.6	28.9	92	92
80	3	25.9	30.5	108	108
100	4	27.7	33.0	121	140
6000Lb					
6	1/8	6.4	6.7	32	22
8	1/4	8.1	10.2	35	25
10	3/8	9.1	10.4	38	32
15	1/2	10.9	13.6	48	38
20	3/4	12.7	13.9	51	44
25	1	14.7	17.3	60	57
32	1-1/4	17.0	18.0	67	64
40	1-1/2	17.8	18.4	79	76
50	2	19.0	19.2	86	92
65	2-1/2	23.6	28.9	92	108
80	3	25.9	30.5	108	127
100	4	27.7	33.0	121	159

(*) Dimension B is minimum length of perfect thread. The length of useful thread (B plus threads with fully formed roots and flat crests) shall not be less than L2 (effective length of external thread) required by American National Standard for pipe threads (ANSI / ASME B1.20.1) .

DIMENSIONS OF SEAMLESS STEEL PIPE AND SEAMLESS STAINLESS STEEL PIPE

(ASME B36.10M-2004 , ASME B36.19M-2004)

Unit : m/m

TOLERANCES			NPS IN	STEEL PIPE																STAINLESS STEEL PIPE			
A53 A106 O.D.	API 5L O.D.	A530 O.D.		Outside Dia.			SCHEDULE NUMBER(SCH) AND WALL THICKNESS																
				STD	MAX	MIN	10	20	30	40	STD	60	XS	80	100	120	140	160	XXS	5S	10S	40S	80S
+1/64" −1/32"	+1/64" −1/32"	+1/64" −1/32"	1/8	10.3	10.7	9.9	1.24	-	1.45	1.73	1.73	-	2.41	2.41	-	-	-	*3.15	*4.83	1.7	1.2	1.7	2.4
			1/4	13.7	14.1	13.3	1.65	-	1.85	2.24	2.24	-	3.02	3.02	-	-	-	*3.68	*6.05	1.7	1.7	2.2	3.0
			3/8	17.1	17.5	16.7	1.65	-	1.85	2.31	2.31	-	3.20	3.20	-	-	-	*4.01	*6.40	1.7	1.7	2.3	3.2
			1/2	21.3	21.7	20.9	2.11	-	2.41	2.77	2.77	-	3.73	3.73	-	-	-	4.78	7.47	1.7	2.1	2.8	3.7
			3/4	26.7	27.1	26.3	2.11	-	2.41	2.87	2.87	-	3.91	3.91	-	-	-	5.56	7.82	1.7	2.1	2.9	3.9
			1	33.4	33.8	33.0	2.77	-	2.97	3.38	3.38	-	4.55	4.55	-	-	-	6.35	9.09	1.7	2.8	3.4	4.6
			1-1/4	42.2	42.6	41.8	2.77	-	2.97	3.56	3.56	-	4.85	4.85	-	-	-	6.35	9.70	1.7	2.8	3.6	4.9
			1-1/2	48.3	48.7	47.9	2.77	-	3.18	3.68	3.68	-	5.08	5.08	-	-	-	7.14	10.15	1.7	2.8	3.7	5.1
±1%		±1/32"	2	60.3	60.9	59.7	2.77	-	3.18	3.91	3.91	-	5.54	5.54	-	-	-	8.74	11.07	1.7	2.8	3.9	5.5
	±0.75%		2-1/2	73.0	73.7	72.2	3.05	-	4.78	5.16	5.16	-	7.01	7.01	-	-	-	9.53	14.02	2.1	3.1	5.2	7.0
			3	88.9	89.8	88.0	3.05	-	4.78	5.49	5.49	-	7.62	7.62	-	-	-	11.13	15.24	2.1	3.1	5.5	7.6
			3-1/2	101.6	102.6	100.6	3.05	-	4.78	5.74	5.74	-	8.08	8.08	-	-	-	-	-	2.1	3.1	5.7	8.1
			4	114.3	115.4	113.2	3.05	-	4.78	6.02	6.02	-	8.56	8.56	-	11.13	-	13.49	17.12	2.1	3.1	6.0	8.6
		+1/16" −1/32"	5	141.3	142.7	139.9	3.40	-	-	6.55	6.55	-	9.53	9.53	-	12.70	-	15.88	19.05	2.8	3.4	6.6	9.5
			6	168.3	170.0	166.6	3.40	-	-	7.11	7.11	-	10.97	10.97	-	14.27	-	18.26	21.95	2.8	3.4	7.1	11.0
			8	219.1	221.3	216.9	3.76	6.35	7.04	8.18	8.18	10.31	12.70	12.70	15.09	18.26	20.62	23.01	22.23	2.8	3.8	8.2	12.7
		+3/32" −1/32"	10	273.0	275.8	270.4	4.19	6.35	7.80	9.27	9.27	12.70	12.70	15.09	18.26	21.44	25.40	28.58	25.40	3.4	4.2	9.3	12.7
			12	323.8	327.1	320.7	4.57	6.35	8.38	10.31	9.53	14.27	12.70	17.48	21.44	25.40	28.58	33.32	25.40	4.0	4.6	9.5	12.7
			14	355.6	359.2	352.0	6.35	7.92	9.53	11.13	9.53	15.09	12.70	19.05	23.83	27.79	31.75	35.71	-	4.0	4.8	9.5	12.7
			16	406.4	410.5	402.3	6.35	7.92	9.53	12.70	9.53	16.66	12.70	21.44	26.19	30.96	36.53	40.49	-	4.2	4.8	9.5	12.7
			18	457.0	461.8	452.6	6.35	7.92	11.13	14.27	9.53	19.05	12.70	23.83	29.36	34.93	39.67	45.24	-	4.2	4.8	9.5	12.7
	+0.15% −0.25%	+1/8" −1/32"	20	508.0	513.1	502.9	6.35	9.53	12.70	15.09	9.53	20.62	12.70	26.19	32.54	38.10	44.45	50.01	-	4.8	5.5	9.5	12.7
			22	559.0	-	-	6.35	9.53	12.70	-	9.53	22.23	12.70	28.58	34.93	41.28	47.63	53.98	-	4.8	5.5	-	-
			24	610.0	615.7	603.5	6.35	9.53	14.27	17.48	9.53	24.61	12.70	30.96	38.89	46.02	52.37	59.54	-	5.5	6.4	9.5	12.7
			26	660.0	-	-	7.92	12.70	-	-	9.53	-	12.70	-	-	-	-	-	-	-	-	-	-
			28	711.0	-	-	7.92	12.70	15.88	-	9.53	-	12.70	-	-	-	-	-	-	-	-	-	-
			30	762.0	-	-	7.92	12.70	15.88	-	9.53	-	12.70	-	-	-	-	-	-	6.4	7.9	-	-
			32	813.0	-	-	7.92	12.70	15.88	17.48	9.53	-	12.70	-	-	-	-	-	-	-	-	-	-
			34	864.0	-	-	7.92	12.70	15.88	17.48	9.53	-	12.70	-	-	-	-	-	-	-	-	-	-
			36	914.0	-	-	7.92	12.70	15.88	19.05	9.53	-	12.70	-	-	-	-	-	-	-	-	-	-

* Thickness in accordance with ASME B16.11.

PACKING LIST

Carton Size : 28 x 20 x 18 cm (L x W x H)

Unit : PC

SIZE NPS	90˚ Elbow				45˚ Elbow				Tee				
	2M NPT 3M SW	3M NPT	6M SW	6M NPT	2M NPT 3M SW	3M NPT	6M SW	6M NPT	2M NPT 3M SW	3M NPT	6M SW	6M NPT	9M SW
1/4"	150	100	100	80	150	100	100	80	100	80	80	50	50
3/8"	100	80	80	50	100	80	80	50	80	50	50	35	35
1/2"	80	50	50	25	80	50	50	25	50	35	35	20	15
3/4"	50	25	25	20	50	30	30	20	35	20	20	12	15
1"	30	20	20	12	30	20	20	12	20	15	15	10	10
1-1/4"	20	15	15	5	20	15	15	5	15	10	10	5	6
1-1/2"	15	6	6	4	15	8	8	4	10	5	5	4	4
2"	8	5	5	2	10	6	6	2	6	4	4	2	2
2-1/2"	4	2	2	1	5	2	2	2	3	2	2	1	-
3"	2	2	1	1	2	2	1	1	2	1	1	1	-
4"	1	1	1	1	1	1	1	1	1	1	1	1	-

SIZE NPS	Cross				Full Coupling				Half Coupling			
	2M NPT 3M SW	3M NPT	6M SW	6M NPT	3M SW	3M NPT	6M SW	6M NPT	3M SW	3M NPT	6M SW	6M NPT
1/4"	40	40	80	40	350	250	250	200	400	800	300	150
3/8"	40	40	40	30	250	200	200	100	250	500	150	80
1/2"	40	30	30	20	120	100	100	60	120	250	80	80
3/4"	30	20	20	12	80	70	70	35	80	150	50	50
1"	20	12	12	6	50	35	35	20	50	80	30	35
1-1/4"	10	6	6	4	30	20	20	15	30	35	25	25
1-1/2"	6	4	4	2	25	15	15	10	25	30	15	20
2"	4	4	2	1	15	10	10	5	15	20	10	6
2-1/2"	2	1	-	-	10	5	5	3	10	12	5	4
3"	1	1	-	-	6	3	3	2	6	6	3	2
4"	-	-	-	-	4	2	2	1	4	4	-	1

SIZE NPS	Cap			Boss				Street Elbow		Insert	
	3M SW/NPT	6M SW	6M NPT	3M SW	3M NPT	6M SW	6M NPT	3M NPT	6M NPT	3M SW	6M SW
1/4"	300	200	250	250	200	200	150	150	80	300	250
3/8"	250	150	130	200	150	150	100	80	50	300	200
1/2"	130	80	80	90	80	80	60	50	25	150	120
3/4"	80	50	50	70	40	40	35	30	20	100	80
1"	50	30	30	35	30	30	20	20	12	80	60
1-1/4"	30	25	25	30	20	20	15	15	5	60	50
1-1/2"	25	15	15	25	15	15	10	8	4	40	40
2"	15	8	10	15	10	10	5	5	2	25	20
2-1/2"	10	5	4	10	5	-	-	4	-	12	10
3"	4	3	3	6	3	-	-	2	-	10	8
4"	3	2	2	4	2	-	-	1	-	4	2

SIZE NPS	OutLet		Union		Hex Plug	Round Plug	Square Plug	Bushing	Hex Nipple	Swage Nipple
	3M SW/NPT	6M SW/NPT	3M SW/NPT	6M SW/NPT	NPT	NPT	NPT	NPT	NPT	S40/S80 S160/XXS
1/4"	200	100	70	–	800	250	800	600	500	200
3/8"	150	100	70	50	600	200	500	500	400	150
1/2"	150	100	50	30	250	150	300	400	200	100
3/4"	100	50	30	20	150	100	200	200	100	70
1"	50	30	20	14	100	80	150	100	65	50
1-1/4"	35	25	14	10	35	50	80	60	35	30
1-1/2"	25	15	10	6	25	30	50	50	25	20
2"	15	10	6	2	20	15	30	25	15	8
2-1/2"	10	5	2	–	8	10	15	15	5	4
3"	6	2	2	–	6	5	10	10	3	3
4"	3	1	1	–	3	3	3	5	2	1

PLYWOOD CASE SIZE : 109x94x86cm / 60 CARTON
PLYWOOD CASE SIZE : 93x90x86cm / 48 CARTON
PLYWOOD CASE SIZE : 93x90x68cm / 36 CARTON

WEIGHT LIST

Unit : KG

SIZE NPS	90 ° Elbow					45 ° Elbow					Tee				
	2M NPT	3M SW	3M NPT	6M SW	6M NPT	2M NPT	3M SW	3M NPT	6M SW	6M NPT	2M NPT	3M SW	3M NPT	6M SW	6M NPT
1/8"	0.10	0.10	0.09	0.10	0.17	0.09	0.10	0.10	0.09	0.11	0.13	0.13	0.13	0.14	0.20
1/4"	0.09	0.08	0.15	0.15	0.33	0.08	0.08	0.12	0.14	0.27	0.11	0.11	0.22	0.20	0.41
3/8"	0.13	0.12	0.29	0.29	0.45	0.10	0.11	0.24	0.26	0.39	0.17	0.15	0.38	0.43	0.63
1/2"	0.25	0.25	0.42	0.44	0.80	0.20	0.20	0.37	0.36	0.63	0.31	0.32	0.56	0.56	0.98
3/4"	0.35	0.32	0.64	0.73	1.31	0.27	0.29	0.56	0.57	1.07	0.43	0.46	0.92	0.94	1.65
1"	0.52	0.53	1.14	1.17	1.61	0.45	0.43	0.94	1.01	1.27	0.69	0.65	1.49	1.49	2.17
1-1/4"	0.90	0.84	1.42	1.48	2.93	0.68	0.69	1.03	1.11	2.24	1.07	1.04	1.76	1.93	3.74
1-1/2"	1.06	1.07	2.63	2.79	3.79	0.82	0.79	2.05	2.22	2.54	1.39	1.35	3.27	3.37	4.71
2"	1.70	1.50	2.92	3.28	7.31	1.41	1.35	2.23	2.52	4.82	2.16	2.04	3.53	3.95	8.87
2-1/2"	3.61	3.20	5.99	8.11	11.18	2.60	2.53	4.19	-	8.16	4.11	3.98	6.99	10.05	13.11
3"	4.81	5.38	8.88	18.10	17.73	4.23	5.10	6.15	14.54	14.16	6.12	5.90	10.19	22.00	21.70
4"	10.21	10.95	14.85	16.77	15.76	8.96	9.41	11.67	-	-	13.27	12.53	19.13	-	18.00

SIZE NPS	Cross				Full Coupling				Half Coupling			
	2M NPT	3M SW	3M NPT	6M SW	3M SW	3M NPT	6M SW	6M NPT	3M SW	3M NPT	6M SW	6M NPT
1/8"	0.17	0.16	0.29	0.17	0.05	0.04	0.05	0.08	0.04	0.02	0.06	0.07
1/4"	0.14	0.13	0.26	0.26	0.05	0.05	0.07	0.10	0.05	0.03	0.09	0.05
3/8"	0.21	0.20	0.44	0.45	0.07	0.07	0.11	0.20	0.07	0.03	0.12	0.09
1/2"	0.40	0.35	0.76	0.67	0.13	0.14	0.20	0.32	0.15	0.06	0.19	0.16
3/4"	0.54	0.47	1.06	1.07	0.19	0.23	0.27	0.45	0.21	0.11	0.31	0.24
1"	0.83	0.73	1.79	1.82	0.33	0.45	0.44	0.87	0.34	0.23	0.51	0.45
1-1/4"	1.24	1.12	2.13	2.26	0.41	0.73	0.66	1.09	0.48	0.37	0.65	0.55
1-1/2"	1.75	1.58	3.93	3.96	0.59	1.18	1.11	1.94	0.56	0.54	0.91	0.96
2"	2.65	2.25	4.27	4.42	0.86	1.40	1.62	2.87	1.09	0.70	1.92	1.39
2-1/2"	5.26	4.37	8.47	-	1.40	2.29	-	4.20	1.63	1.13	-	2.10
3"	7.58	7.24	12.61	-	1.78	3.38	-	6.10	2.18	1.68	-	3.05
4"	16.00	14.58	20.25	-	2.85	5.65	-	10.04	3.71	3.11	-	5.02

SIZE NPS	Reducing Coupling				Cap				Union				Street Elbow	Hex Nipples	Square Head Plug
	3M SW	3M NPT	6M SW	6M NPT	3M SW	3M NPT	6M SW	6M NPT	3M SW	3M NPT	6M SW	6M NPT	3M NPT	3M NPT	
1/8"	0.04	0.05	-	0.08	0.03	0.03	0.05	0.06	0.28	0.28	-	-	0.12	0.01	0.01
1/4"	0.05	0.05	-	0.06	0.04	0.04	0.08	0.06	0.25	0.25	-	-	0.11	0.03	0.02
3/8"	0.07	0.08	-	0.18	0.06	0.05	0.10	0.09	0.25	0.26	0.38	0.35	0.24	0.04	0.03
1/2"	0.16	0.15	0.24	0.35	0.13	0.11	0.16	0.25	0.33	0.34	0.60	0.55	0.34	0.08	0.05
3/4"	0.25	0.18	0.29	0.53	0.16	0.18	0.23	0.40	0.49	0.48	0.91	0.92	0.55	0.12	0.08
1"	0.43	0.62	0.58	1.01	0.25	0.33	0.44	0.71	0.74	0.77	1.57	1.28	1.02	0.24	0.16
1-1/4"	0.67	0.97	1.37	1.05	0.45	0.62	0.64	0.90	1.10	1.14	1.79	1.82	1.24	0.39	0.27
1-1/2"	0.85	1.49	1.07	2.30	0.59	0.72	0.94	1.44	1.61	1.39	3.37	2.85	2.01	0.38	0.38
2"	1.66	2.20	1.83	3.86	0.96	1.09	1.55	2.25	2.16	2.43	5.24	4.70	2.91	1.00	0.63
2-1/2"	2.60	3.22	-	4.20	1.62	1.92	-	3.68	3.97	3.63	7.84	-	-	1.29	1.08
3"	3.14	4.82	-	6.10	2.68	2.91	3.60	5.12	5.94	5.27	-	-	-	1.87	1.53
4"	5.50	8.97	-	10.04	3.82	4.84	-	8.60	12.79	12.00	-	-	-	3.37	3.36

SIZE NPS	Hex Head Plug	Round Head Plug	Bushing	Reducing inserts											
				SIZE	3M	6M	SIZE	3M	6M	SIZE	3M	6M	SIZE	3M	6M
1/8"	0.01	0.02	-	3/8X1/4	0.05	0.06	1-1/4X1/2	0.29	0.34	2X1/2	0.79	0.87	4X2-1/2	3.23	-
1/4"	0.03	0.06	0.01	1/2X3/8	0.07	0.09	1-1/4X3/8	0.32	0.36	2-1/2X2	1.03	1.43	4X2	3.72	-
3/8"	0.05	0.08	0.01	1/2X1/4	0.07	0.08	1-1/4X1/4	0.34	0.37	2-1/2X1-1/2	1.16	1.26	4X1-1/2	4.20	-
1/2"	0.07	0.12	0.03	3/4X1/2	0.12	0.15	1-1/2X1-1/4	0.37	0.53	2-1/2X1-1/4	1.45	1.38	4X1-1/4	4.39	-
3/4"	0.14	0.22	0.05	3/4X3/8	0.08	0.12	1-1/2X1	0.29	0.52	2-1/2X1	1.52	1.56			
1"	0.25	0.34	0.09	3/4X1/4	0.10	0.13	1-1/2X3/4	0.36	0.48	2-1/2X3/4	1.63	1.65			
1-1/4"	0.43	0.55	0.25	1X3/4	0.17	0.27	1-1/2X1/2	0.41	0.52	3X2-1/2	1.38	2.41			
1-1/2"	0.57	0.71	0.34	1X1/2	0.13	0.22	1-1/2X3/8	0.45	0.55	3X2	1.39	1.76			
2"	1.03	1.47	0.45	1X3/8	0.16	0.21	2X1-1/2	0.59	0.87	3X1-1/2	1.41	2.08			
2-1/2"	1.62	2.34	0.60	1X1/4	0.19	0.22	2X1-1/4	0.51	0.61	3X1-1/4	2.12	2.21			
3"	2.60	3.26	1.16	1-1/4X1	0.30	0.40	2X1	0.72	0.75	3X1	2.31	2.39			
4"	5.20	6.24	3.20	1-1/4X3/4	0.25	0.30	2X3/4	0.73	0.83	4X3	2.29	-			

生產製造：

鍛造碳鋼、不鏽鋼、合金鋼

絲口、套焊高壓鋼管配件

柏緯鐵工股份有限公司

公司.仁武廠：高雄市仁武區烏林里仁心路303號(81460)

電話：(07)371-1536. 371-0497. 372-0260

FAX：(07)371-3864. 371-3882.

大發工廠：高雄市大寮區大發工業區華東路46號(83162)

電話：(07)788-1179. FAX : (07)787-2303

WEB SITE: www.bothwell.com.tw

E-MAIL: sales@bothwell.com.tw

box@bothwell.com.tw

Millimeters

CAT. NO: 1806